PRODUCT : TFT TOUCH MODULE

MODULE NO. : WKS24QV017-WCT

SUPPLIER: WKS Technology Co., LTD

DATE: Nov. 06, 2025

SPECIFICATION

Revision: 0.0

WKS24QV017-WCT

This module uses ROHS material

This specification may change without prior notice in order to improve performance or quality. Please contact WKS R&D department for updated specification and product status before design for this product or release of this order.

WRITTEN BY	CHECKED BY	APPROVED BY
Monica	Ljune	Jason

REVISION RECORD

REV NO.	REV DATE	CONTENTS	REMARKS
0.0	2025-11-06	First release	Preliminary

CONTENTS

1、GENERAL INFORMATION

2、EXTERNAL DIMENSIONS

3、ABSOLUTE MAXIMUM RATINGS

4、ELECTRICAL CHARACTERISTICS

5、BACKLIGHT CHARACTERISTICS

6、CTP CHARACTERISTICS

7、ELECTRO-OPTICAL CHARACTERISTICS

8、INTERFACE DESCRIPTION

9、INPUT TIMING

10、RELIABILITY TEST CONDITIONS

11、INSPECTION CRITERION

1、GENERAL INFORMATION

Item of general information	Contents	Unit
LCD Display Size (Diagonal)	2.4	inch
LCD Display Type	TFT/TRANSMISSIVE	-
LCD Display Mode	Normally Black	-
Recommended Viewing Direction	free	
LCM Module size (W×H×T)	43.52×73.61×6.34	mm
Active area (W×H)	36.72×48.96	mm
Number of pixels (Resolution)	240RGB×320	pixel
Pixel pitch (W×H)	0.153×0.153	mm
Color Pixel Arrangement	RGB Stripe	-
LCD Driver IC	ST7789	-
Interface Type	4line-SPI Interface	-
Color Numbers	65K	-
Backlight Type	White LED	-

2、EXTERNAL DIMENSIONS

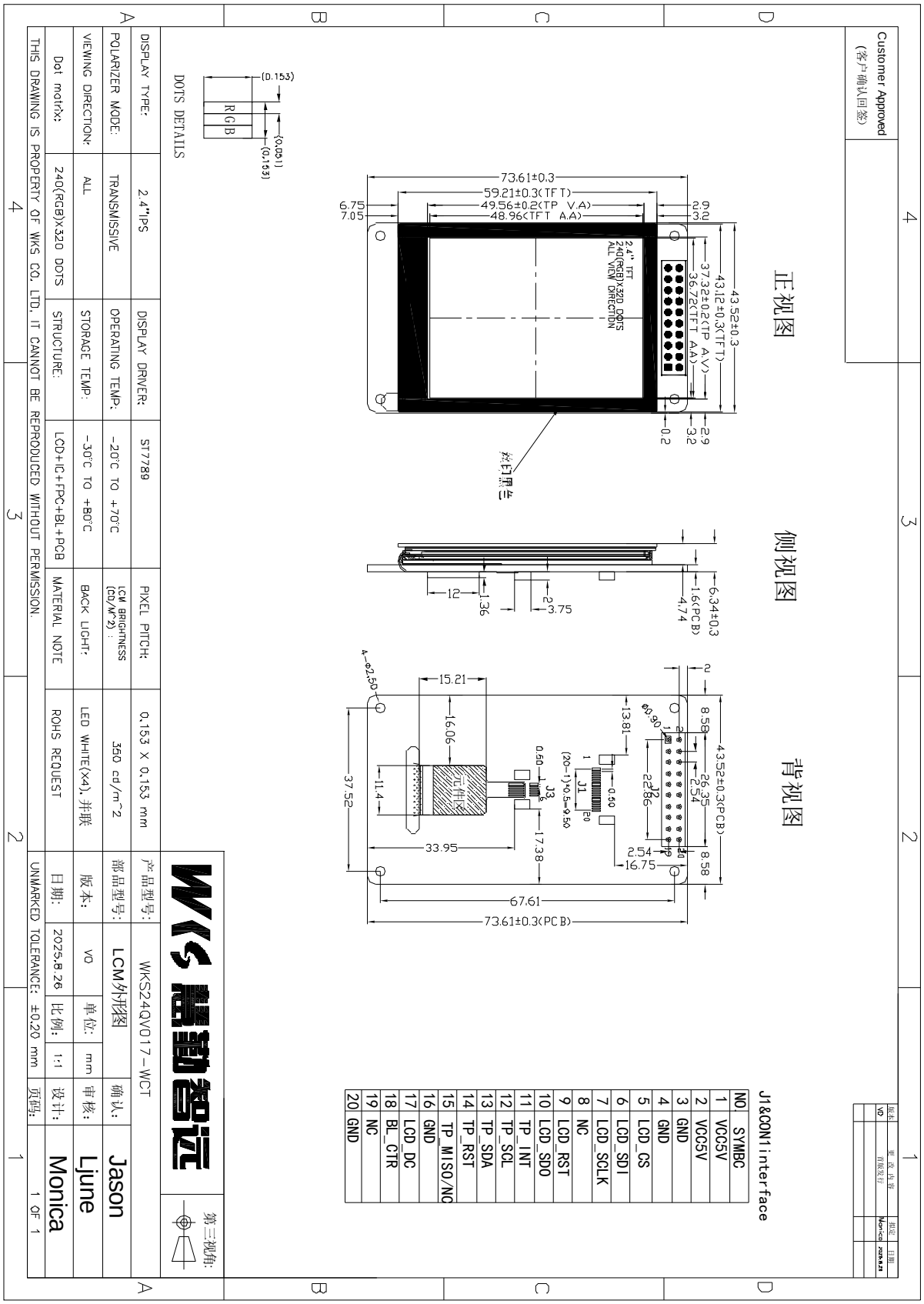

3、ABSOLUTE MAXIMUM RATINGS

Parameter of absolute maximum ratings	Symbol	Min	Max	Unit
Analog Operating Voltage	VCI	-0.3	4.6	V
Logic Operating Voltage	VDDIO	-0.3	4.6	V
Operating temperature	Top	-20	70	℃
Storage temperature	Tst	-30	80	℃
Humidity	RH	-	90%(Max 60 ℃)	RH

Note: Absolute maximum ratings mean the product can withstand short-term, not more than 120 hours. If the product is a long time to withstand these conditions, the life time would be shorter.

4、ELECTRICAL CHARACTERISTICS(DC CHARACTERISTICS)

Parameter of DC characteristics	Symbol	Min.	Typ.	Max.	Unit
Analog Operating Voltage	VCI	2.4	3.0	3.3	V
Logic Operating Voltage	VDDIO	2.4	3.0	3.3	
Input voltage 'H' level	VIH	0.7*VDDIO	-	VDDIO	V
Input voltage 'L' level	VIL	VSS	-	0.3*VDDIO	V
Output voltage 'H' level	VOH	0.8*VDDIO	-	VDDIO	V
Output voltage 'L' level	VOL	VSS	-	0.2*VDDIO	V

5、BACKLIGHT CHARACTERISTICS

Item of backlight characteristics	Symbol	Min.	Typ.	Max.	Unit	Remark
Forward Voltage	Vf	2.8	3.0	3.3	V	Note1
Forward Current	If	-	80	-	mA	
Number of LED	-	-	4	-	Piece	-
LED Connection mode	P/S	-	Parallel	-	-	-

Note:

- Note1: The LED Supply Voltage is defined by the number of LED at Ta=25℃ and If=80mA.
- Backlight circuit:

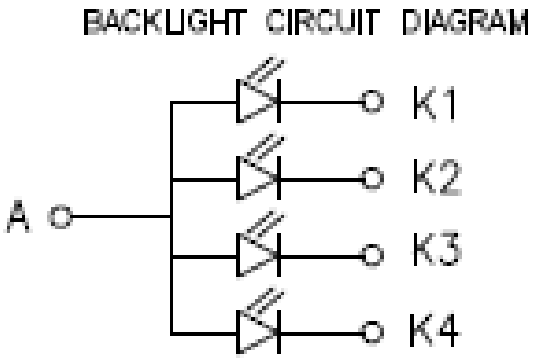

6、CTP CHARACTERISTICS

Item of CTP characteristics	Specification	Unit	Remark
Panel Type	Cover Lens + ITO Glass	-	-
Resolution	240 × 320	pixel	-
Surface Hardness	≥6H	-	-
Transparency	>85%	-	-
Driver IC	GT967	-	-
Interface Type	I2C	-	-
Support Points	5(Max)	-	-
Supply voltage	3.3	V	-

7、ELECTRO-OPTICAL CHARACTERISTICS

Item of electro-optical characteristics		Symbol	Condition	Min.	Typ.	Max.	Unit	Remark	Note
Response time		Tr+Tf	θ=0 ∅=0 Ta=25 ℃	-	35	-	ms	FIG 1.	4
Contrast Ratio		CR		-	1000	-	-	FIG 2.	1
Luminance uniformity		δWHITE		-	80	-	%	FIG 2.	3
Surface Luminance		Lv		-	350	-	cd/m2	FIG 2.	2
CIE (x, y) chromaticity	White	White x	θ=0 ∅=0 Ta=25 ℃	-	0.308	-	-	FIG 2.	5
		White y		-	0.339	-			
	Red	Red x		-	0.658	-			
		Red y		-	0.338	-			
	Green	Green x		-	0.282	-			
		Green y		-	0.62	-			
	Blue	Blue x		-	0.134	-			
		Blue y		-	0.137	-			
Viewing angle range	∅=90(12 o'clock)		CR ≥ 10	-	85	-	deg	FIG 3.	6
	∅=270(6 o'clock)			-	85	-	deg		
	∅=0(3 o'clock)			-	85	-	deg		
	∅=180(9 o'clock)			-	85	-	deg		
NTSC ratio	-		-	-	70	-	%	-	-

Note 1. *Contrast Ratio(CR) is defined mathematically by the following formula. For more information see FIG 2.:*

$$\text{Contrast Ratio(CR)} = \frac{\text{Average Surface Luminance with all white pixels(P1, P2, P3, P4, P5, P6, P7, P8, P9)}}{\text{Average Surface Luminance with all black pixels(P1, P2, P3, P4, P5, P6, P7, P8, P9)}}$$

Note 2. *Surface luminance is the LCD surface from the surface with all pixels displaying white. For more information see FIG 2.*

Lv=Average Surface Luminance with all white pixels (P1,P2,P 3,P4, P5,P6,P7,P8,P9)

Note 3. *The uniformity in surface luminance（δWHITE）is determined by measuring*

luminance at each test position 1 through 9, and then dividing the maximum luminance of 9points luminance by minimum luminance of 9 points luminance. For more information see FIG 2.

$$\delta WHITE = \frac{Minimum\ Surface\ Luminance\ with\ all\ white\ pixels\ (P1, P2, P3, P4, P5, P6, P7, P8, P9)}{Maximum\ Surface\ Luminance\ with\ all\ white\ pixels\ (P1, P2, P3, P4, P5, P6, P7, P8, P9)}$$

Note 4. *Response time is the time required for the display to transition from White to black(Rise Time, Tr) and from black to white(Decay Time, Tf). For additional information see FIG 1.*

Note 5. *CIE (x, y) chromaticity ,The x,y value is determined by screen active area position 5. For more information see FIG 2.*

Note 6. *Viewing angle is the angle at which the contrast ratio is greater than a specific value. For TFT module, the specific value of contrast ratio is 10.The angles are determined for the horizontal or x axis and the vertical or y axis with respect to the z axis which is normal to the LCD surface. For more information see FIG 3.*

Note 7. *For Viewing angle and response time testing, the testing data is base on Autronic-Melchers's ConoScope. Series Instruments. For contrast ratio, Surface Luminance, Luminance uniformity and CIE，the testing data is base on BM-7 photo detector.*

Note 8. *For TN type TFT transmissive module, Gray scale reverse occurs in the direction of panel viewing angle.*

FIG.1. The definition of Response Time

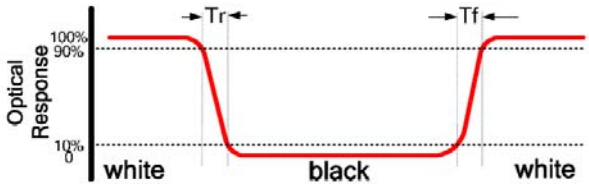

FIG.2. Measuring method for Contrast ratio, surface luminance, Luminance uniformity, CIE (x , y) chromaticity

A : H/6 ;
B : V/6 ;
H,V : Active Area(AA) size
Measurement instrument: BM-7; Light spot size=5mm, 350mm distance from the LCD surface to detector lens.

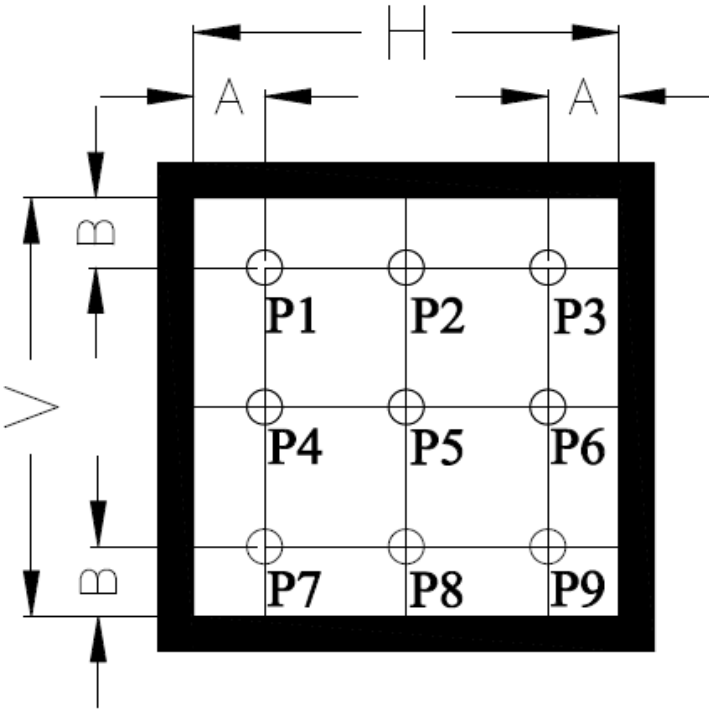

FIG.3. The definition of viewing angle

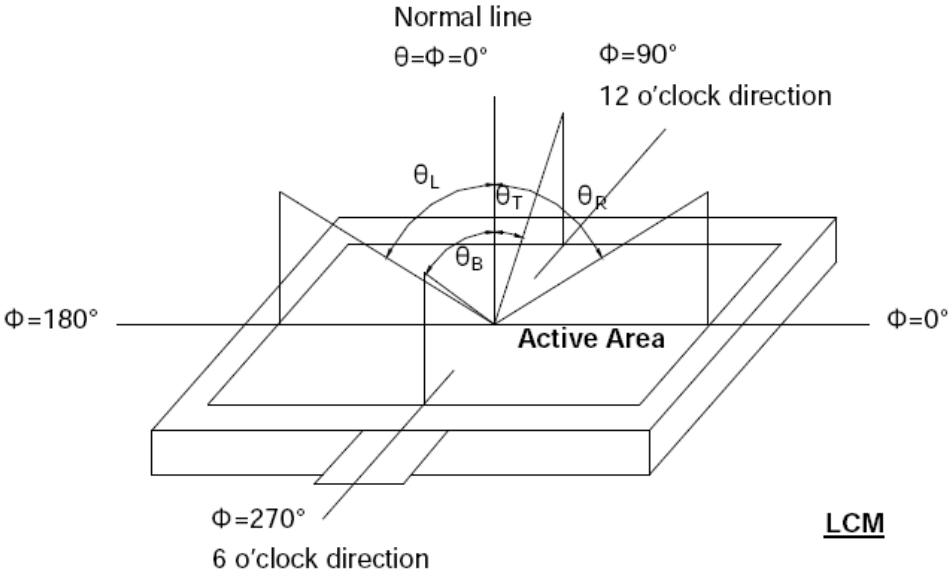

8、INTERFACE DESCRIPTION

NO.	Symbol	I/O	DESCRIPTION
1~2	VCC5V	Power supply	Module Power supply (5V Typ.)
3~4	GND	Power supply	Power ground
5	LCD_CS	I	Chip Select pin
6	LCD_SDI	I	Data input pin 4-wire SPI I/F.
7	LCD_SCLK	I	Clock of 4-wire serial I/F.
8	NC	-	No connection
9	LCD_RST	I	This is an active low Reset pin for LCD.
10	LCD_SDO	O	Data output pin of 4-wire SPI I/F.
11	TP_INT	O	CTP External interrupt to the host
12	TP_SCL	I	CTP I2C clock input
13	TP_SDA	I/O	CTP I2C data input and output
14	TP_RST	I	CTP external reset signal, Low is active
15	NC	-	No connection
16	GND	Power supply	Power ground
17	LCD_DC	I	Data /Command control pin
18	BL_CTR	I	Backlight control pin (PWM)
19	NC	-	No connection
20	GND	Power supply	Power ground

9、INPUT TIMING

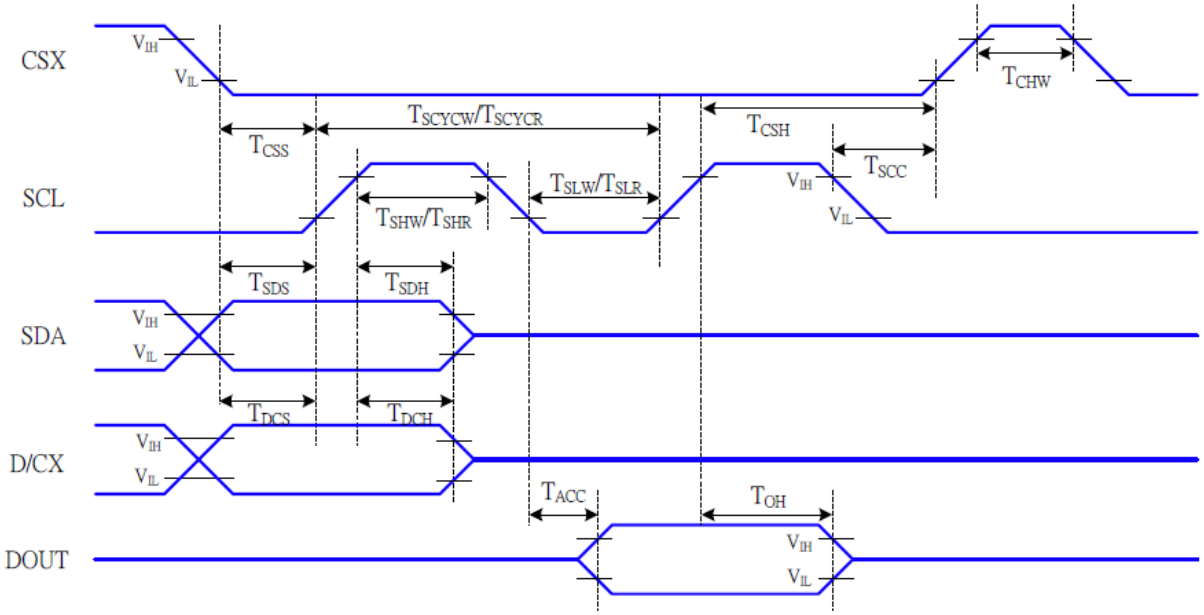

Signal	Symbol	Parameter	MIN	MAX	Unit	Description
CSX	T_{CSS}	Chip select setup time (write)	15		ns	
	T_{CSH}	Chip select hold time (write)	15		ns	
	T_{CSS}	Chip select setup time (read)	60		ns	
	T_{SCC}	Chip select hold time (read)	65		ns	
	T_{CHW}	Chip select "H" pulse width	40		ns	
SCL	T_{SCYCW}	Serial clock cycle (Write)	16		ns	-write command & data ram
	T_{SHW}	SCL "H" pulse width (Write)	7		ns	
	T_{SLW}	SCL "L" pulse width (Write)	7		ns	
	T_{SCYCR}	Serial clock cycle (Read)	150		ns	-read command & data ram
	T_{SHR}	SCL "H" pulse width (Read)	60		ns	
	T_{SLR}	SCL "L" pulse width (Read)	60		ns	
D/CX	T_{DCS}	D/CX setup time	10		ns	
	T_{DCH}	D/CX hold time	10		ns	
SDA (DIN)	T_{SDS}	Data setup time	7		ns	
	T_{SDH}	Data hold time	7		ns	
DOUT	T_{ACC}	Access time	10	50	ns	For maximum CL=30pF
	T_{OH}	Output disable time	15	50	ns	For minimum CL=8pF

10、RELIABILITY TEST CONDITIONS

No.	Test Item	Test Condition
1	High Temperature Storage	80 ℃/96 hours
2	Low Temperature Storage	-30 ℃/96 hours
3	High Temperature Operating	70 ℃/96 hours
4	Low Temperature Operating	-20 ℃/96hours
5	Temperature Cycle Storage	-20 ℃(30min.)~25(5min.)~70 ℃(30min.)×10cycles

A、Inspection after test:

Inspection after 2~4 hours storage at room temperature, the sample shall be free from defects:

- Air bubble in the LCD;
- Sealleak;
- Non-display;
- Missing segments;
- Glass crack;
- Current is twice higher than initial value.

B、Remark:

- The test samples should be applied to only one test item.
- Sample size for each test item is 5~10pcs.
- Failure Judgment Criterion: Basic Specification, Electrical Characteristic, Mechanical Characteristic, Optical Characteristic.

11、INSPECTION CRITERION

This specification is made to be used as the standard of acceptance/rejection criteria for TFT-LCD/IPS TFT-LCD module product, and this specification is applicable only in the case that the size of module equal to or exceed than 4.3 inch.

11.1 Sample plan

Sampling plan according to GB/T2828.1-2003/ISO 2859-1：1999 and ANSI/ASQC Z1.4-1993,normal level 2 and based on:

Major defect: AQL 0.65

Minor defect: AQL 1.5

11.2 Inspection condition

Viewing distance for cosmetic inspection is about 30cm with bare eyes, and under an environment of 20~40W light intensity, all directions for inspecting the sample should be within 45°against perpendicular line. (Normal temperature 20~25℃and normal humidity 60 ±15%RH)

11.3 Definition of Inspection Item.

A、 *Definition of inspection zone in LCD.*

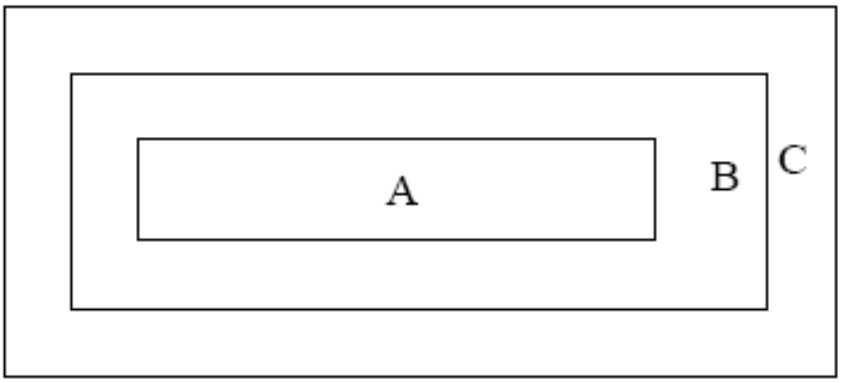

Zone A: character/Digit area

Zone B: viewing area except Zone A (Zone A + Zone B=minimum Viewing area)

Zone C: Outside viewing area (invisible area after assembly in customer's product)

Fig.1 Inspection zones in an LCD

Note: As a general rule, visual defects in Zone C are permissible, when it is no trouble for quality and assembly of customer's product.

B、 *Definition of some visual defect*

Bright dot	*Because of losing all or part function, bad pixel dots appear bright and the size is more than 50% of one dot in which LCD panel is displaying under black pattern.*
Dark dot	*Dots appear dark and unchanged in size in which LCD panel is displaying under pure red, green, blue picture, or pure whiter picture.*

11.4 Major Defect

Item No.	Items to be inspected	Inspection standard	Classification of defects
1	Functional defects	1) No display 2) Display abnormally 3) Missing vertical, horizontal segment 4) Short circuit 5) Excess power consumption 6)Backlight no lighting, flickering and abnormal lighting	major
2	Missing	Missing component	
3	Outline dimension	Overall outline dimension beyond the drawing is not allowed	

11.5、Minor Defect

<table>
<tr><th>Item No.</th><th>Items to be inspected</th><th>Inspection standard</th><th>Classification of defects</th></tr>
<tr><td>1</td><td>Bright dot /dark dot defect</td><td>
<table>
<tr><td rowspan="3">Zone</td><td colspan="4">Acceptable Qty</td></tr>
<tr><td colspan="3">A+B</td><td rowspan="2">C</td></tr>
<tr><td>2.4～7”</td><td>7～10.1”</td><td>＞10.1”</td></tr>
<tr><td>Bright pixel dot</td><td>1</td><td>2</td><td>3</td><td rowspan="5">Acceptable</td></tr>
<tr><td>Dark pixel dot</td><td>4</td><td>4</td><td>4</td></tr>
<tr><td>2bright dots adjacent</td><td>0</td><td>0</td><td>0</td></tr>
<tr><td>2dark dots adjacent</td><td>0</td><td>0</td><td>0</td></tr>
<tr><td>Total bright and dark dots</td><td>5</td><td>6</td><td>7</td></tr>
</table>
Note: Minimum distance between defective dots is more than 5mm; Pixel dots’ function is normal, but bright dots caused by foreign material and other reasons are judged by the dot defect of 5.2.
</td><td>Minor</td></tr>
<tr><td>2</td><td>Dot defect
 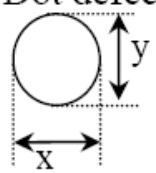

Φ=(x+y) /2</td><td>
<table>
<tr><td rowspan="3">Zone
Size(mm)</td><td colspan="4">Acceptable Qty</td></tr>
<tr><td colspan="3">A+B</td><td rowspan="2">C</td></tr>
<tr><td>2.4”～7”</td><td>7～10.1”</td><td>＞10.1”</td></tr>
<tr><td>Φ≤0.2</td><td>Acceptable</td><td>Acceptable</td><td>Acceptable</td><td rowspan="3">Acceptable</td></tr>
<tr><td>0.2＜Φ≤0.5</td><td>4</td><td>5</td><td>6</td></tr>
<tr><td>Φ＞0.5</td><td>0</td><td>0</td><td>0</td></tr>
</table>
Note:
1. Minimum distance between defective dots is more than 5 mm;
2. The quantity of defect is zero in operating condition.
</td><td>Minor</td></tr>
<tr><td>3</td><td>Linear defect</td><td>
<table>
<tr><td colspan="2" rowspan="3">Zone
Size (mm)</td><td colspan="4">Acceptable Qty</td></tr>
<tr><td colspan="3">A+B</td><td rowspan="2">C</td></tr>
<tr><td>Length</td><td>Width</td><td>2.4”～7”</td><td>7～10.1”</td><td>＞10.1”</td></tr>
<tr><td>Ignore</td><td>W≤0.05</td><td>Acceptable</td><td>Acceptable</td><td>Acceptable</td><td rowspan="3">Acceptable</td></tr>
<tr><td>L≤5.0</td><td>0.05＜W≤0.1</td><td>4</td><td>5</td><td>6</td></tr>
<tr><td>L＞5.0</td><td>W＞0.1</td><td>0</td><td>0</td><td>0</td></tr>
</table>
</td><td>Minor</td></tr>
</table>

<table>
<tr><td>4</td><td>Polarizer defect</td><td>
5.4.1 Polarizer Position
(i) Shifting in position should not exceed the glass outline dimension.
(ii) Incomplete covering of the viewing area due to shifting is not allowed.
5.4.2 Dirt on polarizer
Dirt which can be wiped easily should be acceptable.
5.4.3 Polarizer Dent & Air bubble
<table>
<tr><td rowspan="3">Zone
Size(mm)</td><td colspan="4">Acceptable Qty</td></tr>
<tr><td colspan="3">A+B</td><td rowspan="2">C</td></tr>
<tr><td>2.4”～7”</td><td>7～10.1”</td><td>＞10.1”</td></tr>
<tr><td>Φ≤0.2</td><td>Acceptable</td><td>Acceptable</td><td>Acceptable</td><td rowspan="3">Acceptable</td></tr>
<tr><td>0.2＜Φ≤0.5</td><td>4</td><td>5</td><td>6</td></tr>
<tr><td>Φ＞0.5</td><td>0</td><td>0</td><td>0</td></tr>
</table>
5.4.4 Polarizer scratch
(i) If the polarizer scratch can be seen after cover assembling or in the operating condition, judge by the linear defect of 5.3.
(ii)If the polarizer scratch can be seen only in non-operating condition or some special angle, judge by the following:
<table>
<tr><td colspan="2" rowspan="3">Zone
Size (mm)</td><td colspan="4">Acceptable Qty</td></tr>
<tr><td colspan="3">A+B</td><td rowspan="2">C</td></tr>
<tr><td>Length</td><td>Width</td><td>2.4”～7”</td><td>7～10.1”</td><td>＞10.1”</td></tr>
<tr><td>Ignore</td><td>W≤0.05</td><td>Acceptable</td><td>Acceptable</td><td>Acceptable</td><td rowspan="3">Acceptable</td></tr>
<tr><td>1.0＜L≤5.0</td><td>0.05＜W≤0.20</td><td>4</td><td>5</td><td>6</td></tr>
<tr><td>L＞5.0</td><td>W＞0.2</td><td>0</td><td>0</td><td>0</td></tr>
</table>
</td><td>Minor</td></tr>
<tr><td rowspan="2">5</td><td>MURA</td><td>Using 3% ND filter, it’s NG if it can be seen in R,G,B picture.</td><td rowspan="2">Minor</td></tr>
<tr><td>White/Black dot（MURA）</td><td>Visible under：ND3%；D≦0.15mm, Acceptable；
0.15mm<D≦0.5mm, N≦4；D>0.5mm, Not allowable.</td></tr>
</table>

<table>
<tr><td rowspan="3">6</td><td rowspan="3">Glass defect</td><td>(i) Crack
Cracks are not allowed.
 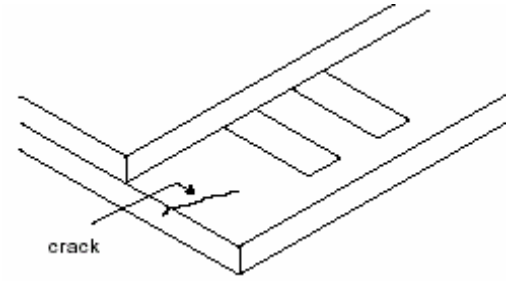
</td><td>Minor</td></tr>
<tr><td>(ii) TFT chips on corner
 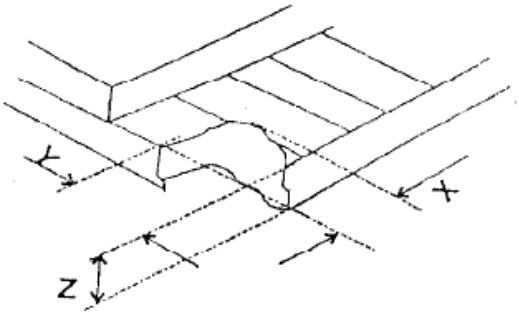

<table><tr><td>X</td><td>Y</td><td>Z</td><td>Acceptable</td></tr><tr><td>≤3.0</td><td>≤3.0</td><td>Not more than the thickness of glass</td><td>N≤3</td></tr></table>Chips on the corner of terminal shall not be allowed to extend into the ITO pad or expose perimeter seal.</td><td>Minor</td></tr>
<tr><td>(iii) Usual surface crack
 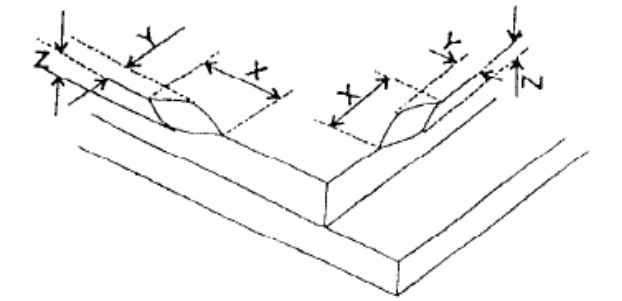

<table><tr><td>X</td><td>Y</td><td>Z</td><td>Acceptable</td></tr><tr><td>≤1.5</td><td>≤1.5</td><td>Not more than the thickness of glass</td><td>N≤4</td></tr></table>It is only applicable to the upper glass of LCD.</td><td>Minor</td></tr>
</table>

11.6 Module Cosmetic Criteria

Item No.	Items to be inspected	Inspection Standard	Classification of defects
1	Difference in Spec.	Not allowable	Major
2	Pattern peeling	No substrate pattern peeling and floating	Major
3	Soldering defects	No soldering missing	Major
		No soldering bridge	Major
		No cold soldering	Minor
4	Resist flaw on PCB	Visible copper foil (Φ0.5 mm or more) on substrate pattern is not allowed	Minor
5	FPC gold finger	No dirt, breaking, oxidation lead to black	Major
6	Backlight plastic frame	No deformation, crack, breaking, backlight positioning column breaking, obvious nick.	Minor
7	Marking printing effect	No dark marking, incomplete, deformation lead to unable to judge	Minor
8	Accretion of metallic Foreign matter	No accretion of metallic foreign matter (Not exceed Φ0.2mm)	Minor
9	Stain	No stain to spoil cosmetic badly	Minor
10	Plate discoloring	No plate fading, rusting and discoloring	Minor
11	1. Lead parts	a. Soldering side of PCB Solder to form a 'Filet' all around the lead. Solder should not hide the lead form perfectly.	Minor
		b. Components side(In case of 'Through Hole PCB') Solder to reach the Components side of PCB.	Minor
	2. Flat packages	Either 'Toe'(A) or 'Seal'(B)of the lead to be covered by "Filet". Lead form to be assume over Solder. 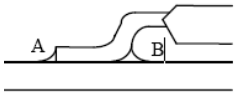	Minor
	3. Chips	(3/2) H ≥h ≥(1/2) H 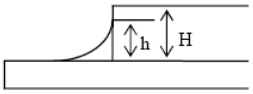	Minor
	4. Solder ball/Solder splash	a. The spacing between solder ball and the conductor or solder pad h ≥0.13 mm. The diameter of solder ball d≤0.15 mm.	Minor
		b. The quantity of solder balls or solder splashes isn't beyond 5 in 600 mm2.	Minor
		c. Solder balls/Solder splashes do not violate minimum electrical clearance.	Major